CST8248 – Emerging Technologies

Professor: Denis Latremouille

Week 02

CST8248

Agenda

- Hyper Threading in Virtualization
- Templates
- Sample Project Topology

Hypervisors

- Available Type 1 Hypervisors
  - Microsoft Hyper-V
  - Citrix XenServer
  - Proxmox
  - ESXi (vSphere)
  - Nutanix
  - VergeIO
  - XCP-NG

Hypervisors

- Type 1 Advantages
  - Dedicated Hardware for virtualization (less overhead)
  - Clustering (Horizontal Scaling)
  - High Availability (HA)
  - Fault Tolerance (FT)
  - Memory Ballooning (Vertical scaling)

- Disadvantages
  - Higher operational and ownership costs
  - Not as portable

Not a Hypervisor

- Containerization
  - Common Kernel
  - Separation for services
- Docker
  - Services for provisioning, monitoring and managing containers
- Kubernetes - K8s
  - Orchestration for containers
- Proxmox supports containerization and virtual machines
- Containers are not Virtual Machines.

Datacenter Architecture

- Compute Nodes
  - A host which contains Processing and Memory for running vApps, VMs or containers
- Storage Nodes
  - A device that offers up storage to hosts on a network.
- Compute Node vs Host
  - A host is typically defined as a set of resources (CPU, Memory, Storage, Networking)
  - A compute node typically does not contain any local storage.

Hyper-Threading

- Intel® Hyper-Threading Technology is a hardware innovation that allows more than one thread to run on each core. More threads means more work can be done in parallel.

Source: https://www.intel.ca/content/www/ca/en/gaming/resources/hyper-threading.html

Hyper-Threading

- Consider the following diagram:
  - Is this the perceived affect?
  - What does not seem correct?
  - These Threads represent Logical Cores.

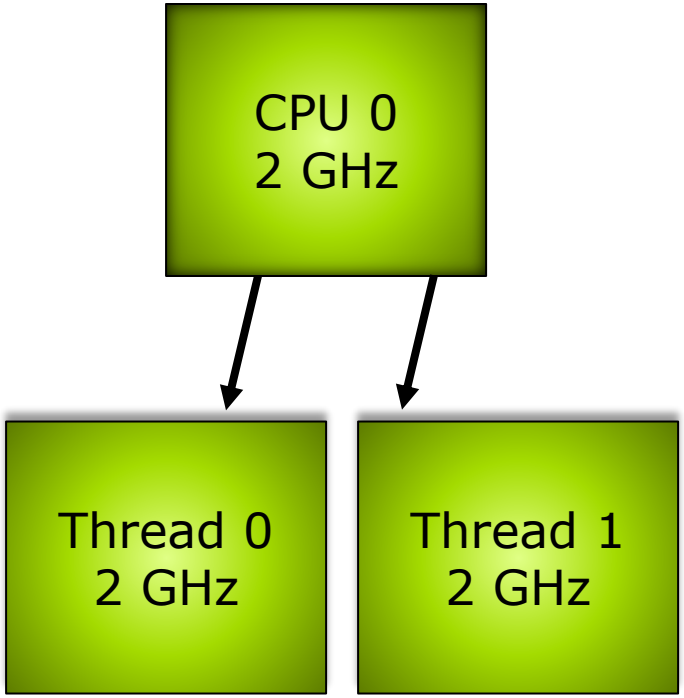

Hyper-Threading

- Reality
- Hyperthreading offers multitasking at the cost of Raw Power.
- Why should you care?

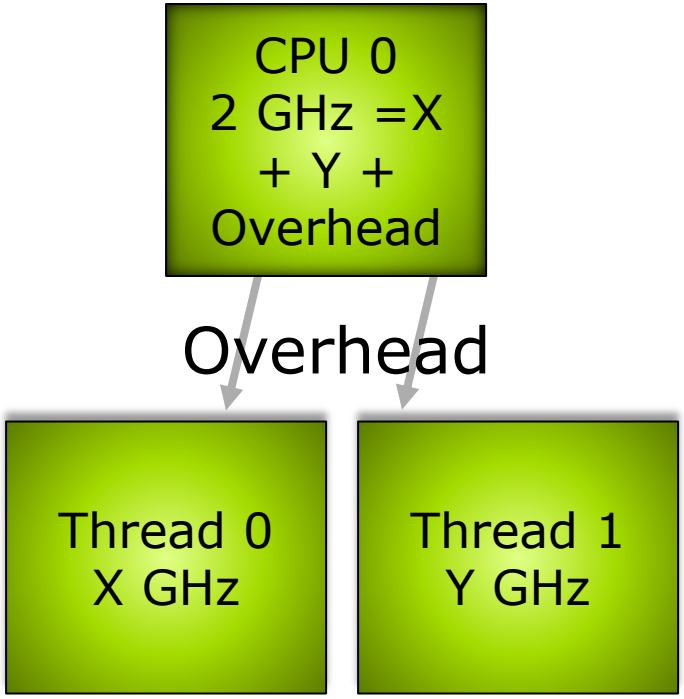

Hyper-Threading

- 1 Socket
- 2 Cores per Socket
- The problem of overhead and time slicing becomes more of a problem. Peak demand workloads become slow
- Most $/CPU pricing works better for you this way

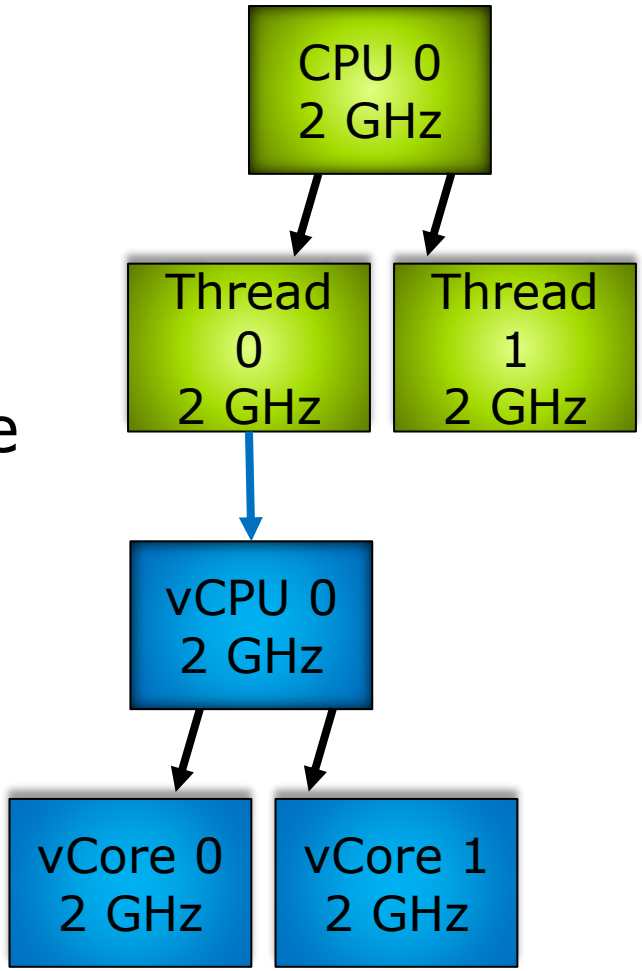

Hyper-Threading

- 2 Socket
- 1 Cores per Socket
- More Power. Fewer subdivided logical cores. Better peak demand performance

- Possibly higher operational costs
- Fewer VM's per server

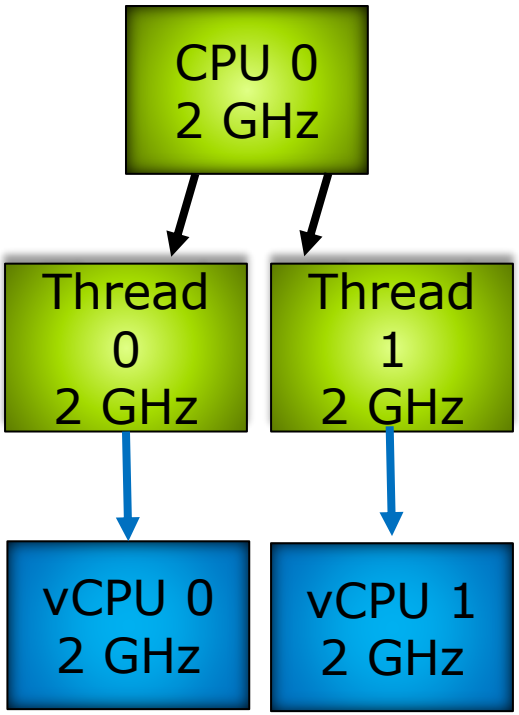

A Bad Scene

- Virtualization
- 1 Socket
- 4 Cores per Socket

- Any benefit?
- What happens under high loads?

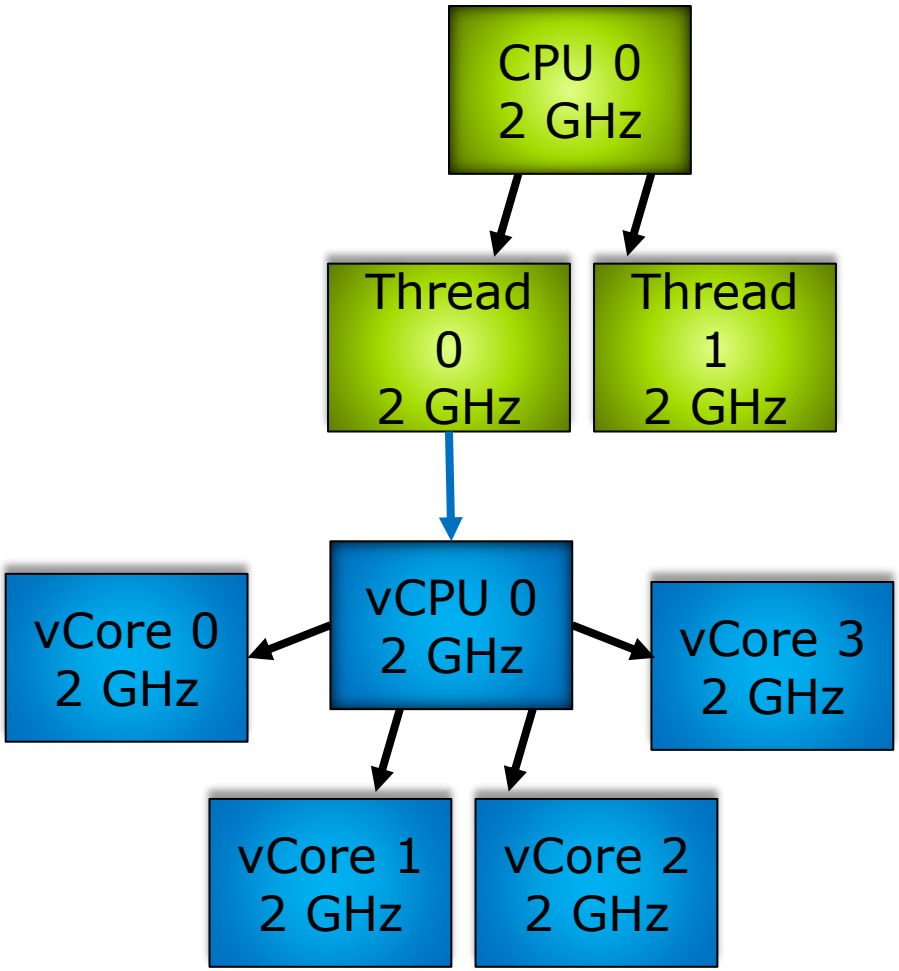

Introduction to Proxmox VE

- Open-source virtualization platform based in Debian Linux
- Combines KVM virtualization and LXC containers
- Web-based management interface
  - Port 8006
- Suitable for enterprise and homelab environments

System Requirements

- 64-bit CPU with virtualization support (Intel VT-x / AMD-V)
- Minimum 2 GB RAM (8 GB+ recommended)
- Local storage (SSD recommended)
- Network interface card (1 Gbps or higher)

Installation Overview

- Configure your server with storage and set the IPMI management IP and credentials
- Download Proxmox VE ISO
- Boot from installation media
- Select target disk and filesystem
- Configure region, password, and network
- Complete installation and reboot

Storage Options Overview

- Local storage (Directory, LVM, LVM-Thin, ZFS)
  - Problematic for scaling and clustering
- Network storage (NFS, iSCSI, Ceph)
- Backup storage support (used for PBS)

Local Storage Configuration

- Directory: simple file-based storage
- LVM: block-based storage
- LVM-Thin: efficient snapshot support
- ZFS Storage
  - Advanced filesystem with snapshots and compression
  - Supports RAID-Z and mirrors
  - Memory intensive (RAM requirement)
  - Ideal for data integrity and performance
- Suitable for standalone hosts

Network Storage Options

- NFS: simple shared storage
- iSCSI: block-level storage
- Ceph: distributed and highly available
- Enables live migration and clustering

Network Configuration Overview

- Linux bridge-based networking
  - Interface ID vmbr0 will be management
  - VLAN-aware
- Bonding for redundancy and throughput

Management Network Configuration

- Dedicated management IP (sometimes)
- Optional out-of-band management
- Web UI and SSH access
- Secure access with firewall rules

Virtual Network Configuration

- vmbr bridges for VM connectivity
- VLAN tagging support
- Isolated networks for internal traffic
- Integration with physical switches

VLAN support

- EST – External Switch Tagging
  - Physical switch port is configured as an **access port**.
  - The Hypervisor and Guest VMs use untagged traffic
- VST – Virtual Switch Tagging
  - Virtual Switches in the Hypervisor tag traffic
  - Physical Switches use 802.1Q trunking
  - Guest OS sees untagged traffic
- GST – Guest Switch Tagging
  - The guest OS performs VLAN tagging.
  - Physical Switches use 802.1Q trunking
  - Virtual switches should be set to allow all traffic.

Initial Configuration Tasks

- Update repositories and packages
- Configure storage and backups
- Set time synchronization (NTP)
- Configure email notifications

Proxmox Management Interface

- Web-based GUI
- Role-based access control
- Integrated console access
- Monitoring and logs

Cluster Management

- Creating Proxmox clusters
- Corosync-based communication
- Shared storage requirements
- Enables live migration and HA

Advanced Configuration

- High Availability (HA)
- Resource pools
- PCI passthrough
- GPU virtualization

Backup and Restore

- Scheduled backups
- Snapshot support
- Local and remote backup targets
- Proxmox Backup Server integration

Security Best Practices

- Use strong authentication
- Enable firewall at host and VM level (zero trust)
- Regular updates and patches
- Limit management access (Least Privilege)

Performance Best Practices

- Use virtio drivers
- Allocate resources carefully
- Monitor CPU, RAM, and I/O
- Use SSDs for VM storage

Operational Best Practices

- Document configuration
- Regular backups and test restores
- Monitor logs and alerts
- Plan capacity and scaling